The 9152 Kit can be used to repair the following products:

1125 1128

2125 2129

2126 2127

725 729

4325 4329

4525 4529

4526 4530

5325 5329

5025 5026

5027 5028

MR Akromatic®

Akromatic II®

AKRON® BRASS COMPANY

ISO 9001 REGISTERED COMPANY

PHONE: 330.264.5678 or 800.228.1161 | FAX: 330.264.2944 or 800.531.7335 | www.akronbrass.com
Available in Canada through AKRON MANUFACTURING COMPANY
PHONE: 519.773.8431 | FAX: 519.773.3794

AB - 555 (REV. 4/99)

WARRANTY AND DISCLAIMER: We warrant Akron Brass products for a period of five (5) years after purchase against defects in materials or workmanship. Akron Brass will repair or replace product which fails to satisfy this warranty. Repair or replacement shall be at the discretion of Akron Brass. Products must be promptly returned to Akron Brass for warranty service.

We will not be responsible for: wear and tear; any improper installation, use, maintenance or storage; negligence of the owner or user; repair or modification after delivery; damage; failure to follow our instructions or recommendations; or anything else beyond our control. WE MAKE NO WARRANTIES, EXPRESS OR IMPLIED, OTHER THAN THOSE INCLUDED IN THIS WARRANTY STATEMENT, AND WE DISCLAIM ANY IMPLIED WARRANTY OF MERCHANTABILITY OR FITNESS FOR ANY PARTICULAR PURPOSE. Further, we will not be responsible for any consequential, incidental or indirect damages (including, but not limited to, any loss of profits) from any cause whatsoever. No person has authority to change this warranty.

© Premier Farnell Corporation. 2000 All rights reserved. No portion of this can be reproduced without the express written consent of Premier Farnell Corporation.

A Premier Farnell Company

AKRON® BRASS COMPANY

Style 9152* Field Service Kit for

IMPERIAL NOZZLE™

725 2½"

729 2½" w/1½" Thread

BALL SHUTOFFS (BRASS)

1125 2½" w/1½" Thread

1128 2½"

BALL SHUTOFFS (PYROLITE)®

2125 2½"

2129 2½" w/1½" Thread

2126 2½" w/Pistol Grip

2127 2½" w/Pistol Grip and 1½" Thread

MARAUDER®/MARAUDAMATIC NOZZLES

4325/4525/5325 2½"

4329/4529/5329 2½" w/1½" Thread

4526 2½" w/Pistol Grip

4530 2½" w/Pistol Grip and 1½" Thread

MID-RANGE AKROMATIC NOZZLES

5015 1½"

5016 1½" w/Pistol Grip

5020 1½" w/VCR

5021 1½" w/Pistol Grip and VCR

AKROMATIC® 400 NOZZLES

5025 2½"

5026 2½" w/1½" Thread

5027 2½" w/Pistol Grip

5028 2½" w/Pistol Grip and 1½" Thread

AKROMATIC II NOZZLES

5125 2½"

5126 2½" w/1½" Thread

5127 2½" w/Pistol Grip

5128 2½" w/Pistol Grip and 1½" Thread

5135 2½"

5136 2½" w/1½" Thread

5137 2½" w/Pistol Grip

5138 2½" w/Pistol Grip and 1½" Thread

*Replaces field service kits 9113, 9114, 9117, 9118, 9122, 9123, 9132, 9133, 9142, 9143, 9148, 9149

110120

USE THESE ILLUSTRATIONS TO IDENTIFY THE VARIOUS PARTS IN THIS KIT

Item No. 1
PN 7-57-022
O-Ring (2)
Handle Trunnion

Item No. 2
PN 7-57-060
O-Ring Seat (2)

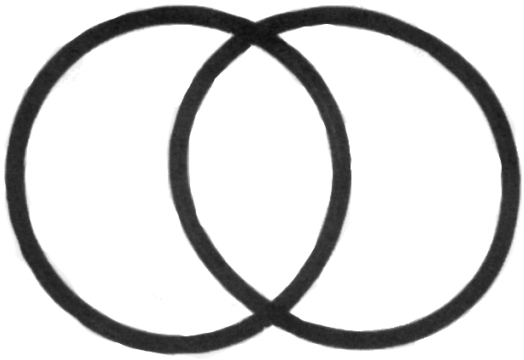

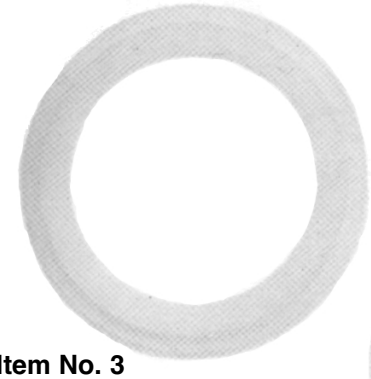

Item No. 3
PN 7-69-243
Seat (2)

Item No. 4
PN 7-04-029
Ball

Rivet
PN 7-54-003
Use to Drive Out
Roll Pins in Handle
Trunnions

Item No. 5
PN 7-57-150
O-Ring
Inlet Adapter

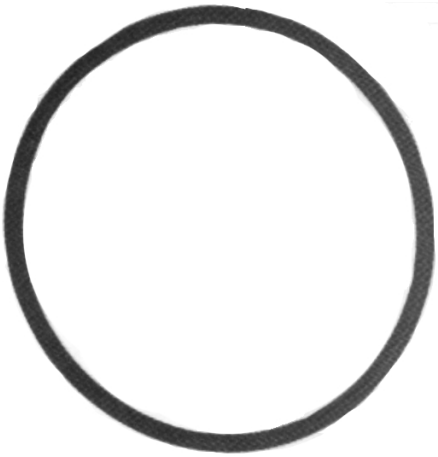

Item No. 6
PN 7-17-042
Swivel Gasket 1-1/2”

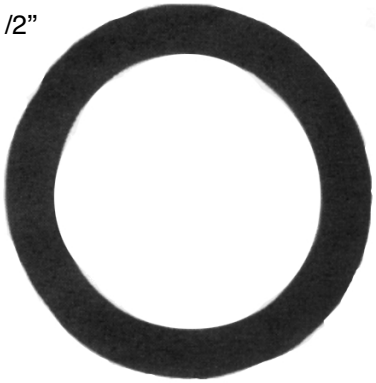

Item No. 7
PN 7-17-043
Swivel Gasket 2-1/2”

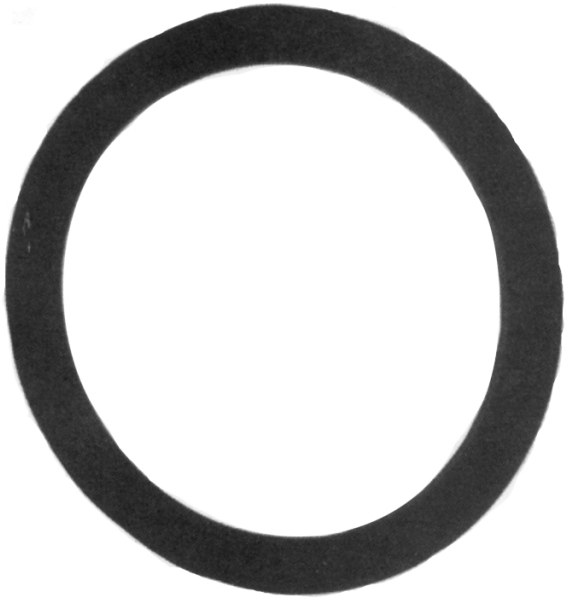

Item No. 8
PN 7-44-062
Roll Pin (2)

AKRON
BRASS COMPANY

Style 9152
Field Service Kit
for

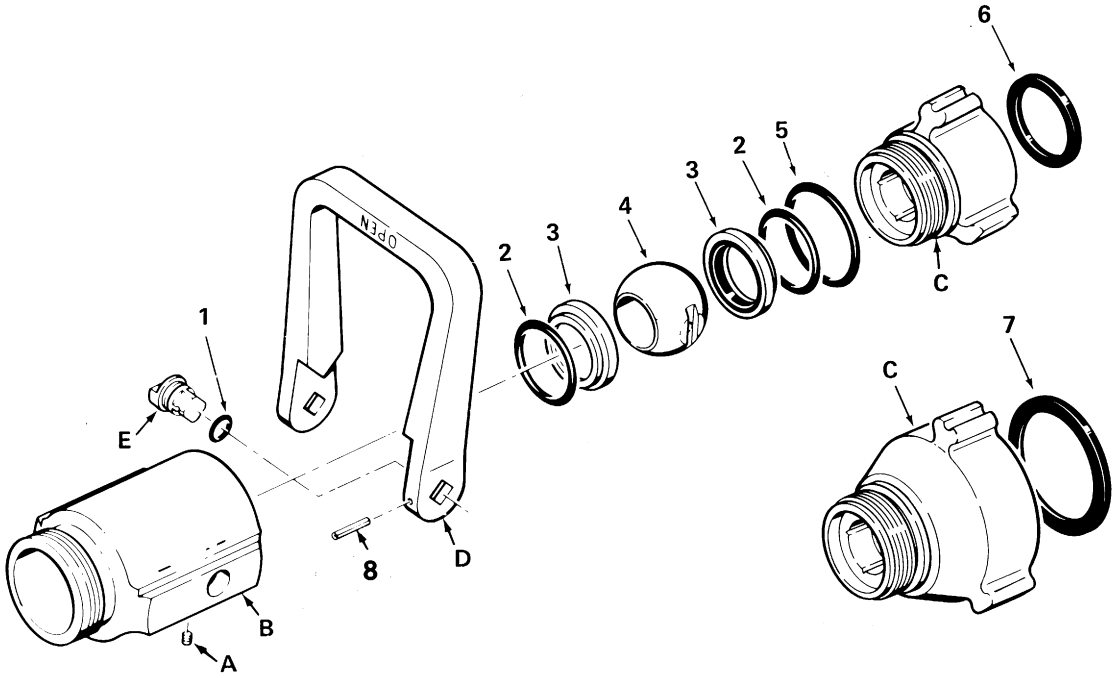

ITEM NO.	DESCRIPTION	PART NUMBER
1 O-Ring (2)	7-57-022	
2 O-Ring (2)	7-57-060	
3 Seat (2)	7-69-243	
4 Ball7-04-029		
5 O-Ring	7-57-150	
6 1-1/2" Gasket	7-17-042	
7 2-1/2" Gasket	7-17-043	
8 Roll Pins (2)	7-44-062	

Parts included in this kit are normally all that are required to repair leaks in the shutoff area. If additional nozzle components are required, contact Akron Brass for the appropriate technical service bulletin or return the nozzle to our factory; Akron Brass Co., Old Mansfield Rd., Wooster, Ohio 44691 or Akron Manufacturing Co., P.O. Box 280, Aylmer, Ontario N5H2R9.

FIELD SERVICE KIT INSTRUCTIONS

DISASSEMBLY

1. Remove the swivel gasket (6 or 7).
2. Remove the set screw (A) at the swivel end of the shutoff body (B). Depending on the version of the nozzle, it will require an 1/8” Allen wrench (for a 1/4-20 screw) or a 3/32” Allen wrench (for a 10-24 screw).
3. Insert a tool 1-1/16” square (for a 2-1/2” swivel adapter) into the grooves in the swivel adapter (C) and remove (counterclockwise).
4. Remove the O-Ring (5) from the shutoff body.
5. Remove the seat and O-Ring (3 and 2) from the swivel adapter.

   NOTE: Any fiber spacer rings must remain in the swivel adapter recess under the seat and O-Ring for proper reassembly.

6. Turn the handle (D) to the closed position and remove the ball (4).
7. Mark the end of the trunnions (E) and handle so they can be reassembled in exactly the same position. (Use chalk, grease pencil, etc.)
8. Take the rivet supplied in the service parts kit and drive out the roll pins (8) securing the handle to the trunnions.
9. Push the trunnions into the shutoff body until they are free. Remove the handle trunnions.
10. Remove the O-Rings (1) from the trunnions.
11. Remove the front seat and O-Ring (3 and 2). Depending on the age of the nozzle the seat may not have an O-Ring. The new seats must be installed with an O-Ring.

ASSEMBLY

NOTE: All O-Rings must be lubricated with O-Ring grease before assembly.

1. Install the new O-Rings (2) on the new seats (3).
2. Insert the new front seat an O-Ring into the shutoff body (B).
3. Install the new O-Rings (1) on the trunnions (E).
4. Place the handle (D) over the trunnion holes with the closed lettering facing the outlet.
5. Install the trunnions from inside the shutoff body, using the marks (disassembly Step #7) to position properly.
6. Install the new roll pins (8) to secure the handle to the trunnions.
7. With the handle in the closed position, insert the new ball (4).
8. Install the other new seat and O-Ring into the recess of the swivel adapter (C).

   NOTE: To be placed above the plastic spacer rings if so equipped.

9. Install the new O-Ring (5) in the shutoff body recess.
10. With the handle in the closed position, thread the swivel adapter into the shutoff body. (Continue tightening until resistance is felt when opening and closing the shutoff.)
11. Install the new swivel gasket (6 or 7).
12. Test the nozzle with water to determine if the shutoff functions properly. If a small leak is present, tighten the swivel adapter slightly to eliminate the leak.
13. Once the shutoff functions properly, observe the swivel adapter through the set screws hole in the shutoff body. If a full thread is visible, drill a slight recess for the set screw (A) (for a 10-24 set screw use a #25 drill bit; for a 1/4-20 use a 3/16” drill bit). Install and tighten the set screw.